ME 6401: Programming Logic Controller (PLC)

Dr. Md. Zahurul Haq, *Ph.D., CEA, FBSME, FIEB*

Professor
Department of Mechanical Engineering
Bangladesh University of Engineering & Technology (BUET)
Dhaka-1000, Bangladesh

http://zahurul.buet.ac.bd/

ME 6401: Advanced Mechatronics
`http://zahurul.buet.ac.bd/ME6401/`

PLC Features

A programmable logic controller (PLC) is an industrial grade computer that is capable of being programmed to perform control functions. PLC has eliminated much of the hard-wiring associated with conventional relay control circuits.

- Rugged design,
- Industry standard I/O interfaces,
- Industry standard programming languages,
- Robust timing, counting and switching operations,
- Field programmable,
- Reduces hard wiring and wiring cost,
- Monitoring, error checking and diagnostics capability,
- Competitive in both cost and space requirements.

T1619

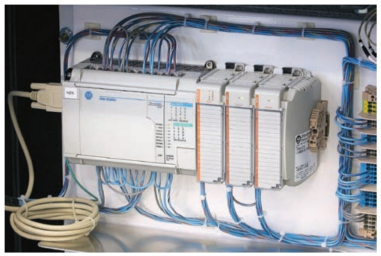

T1620

1. Power supply
2. PLC (programmable logic controller)
3. Digital input cards
4. Digital output cards
5. Analog input cards
6. Transient surge protectors
7. Circuit breakers
8. Relay switches
9. Operator interface terminal
10. NEMA 12 enclosure

T1646

Typical PLC control panel enclosure.

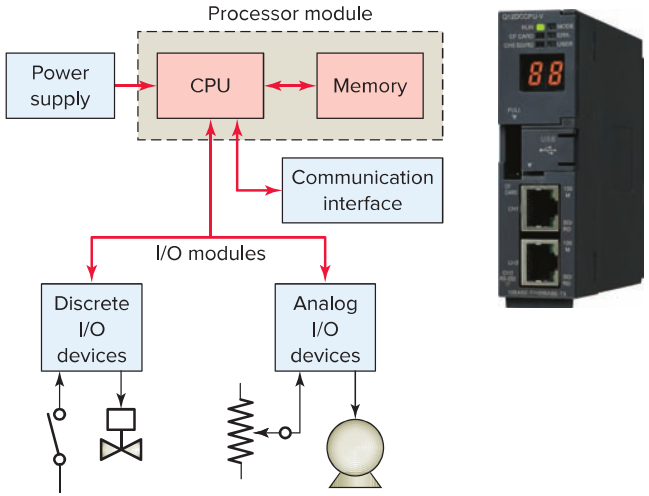

T1631

PLC key components

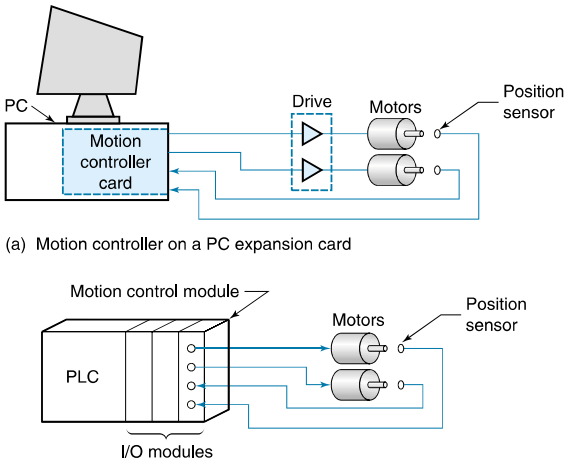

T1806

Advantages of PLCs in motion control.

Multitasking Capability

Some PLCs are capable of executing multiple tasks with a single processor. User program assigns I/O for each task separately. Multitasking may take several forms:

- Time driven - it is possible to configure the processor to run each task on periodic time intervals. Hence, the time-critical job, such as the portion of that controls high-speed motions or machine fault detection, to run faster than the non-critical portions, such as servicing indicator lights.
- Event driven or Interrupt driven - user defines a particular event, such as an input changing state or an output turning off, that causes each tasks to run.

Considerations in Choosing PLC

- Number and Types of input & output points required
- Size and type of memory required
- Speed and power required of CPU and instruction set
- Manufacturer's support and backup

Advanced I/O Modules

- *Thermocouple Module*
- *Motion-control Module*
- *Communication Module*
- *High-speed Counter Module*
- *PID Module*

Key Components of a PLC

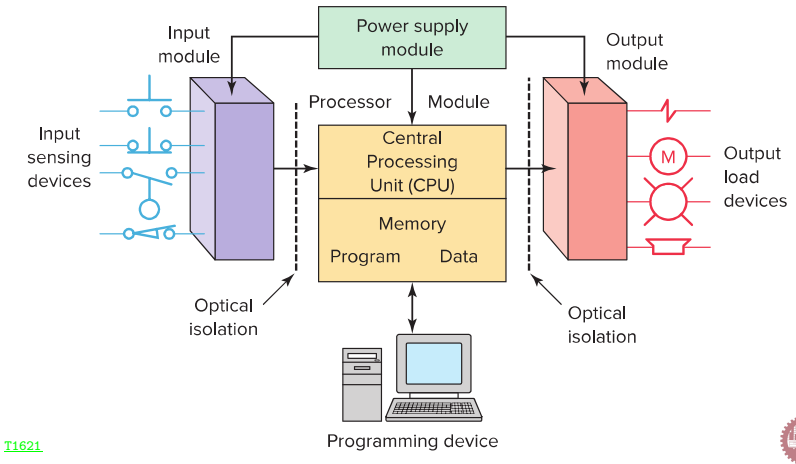

T1621

- Power Supply- PLCs are generally powered from AC mains and power supply system converts ac voltages to required dc voltages.
- Memory - *Program memory* receives and holds program instructions. *Data memory* is used to temporarily hold data generated from processes or acquired through I/O devices.
- Processor is a micro-processor based CPU and is the part of PLC that is capable of reading and executing program instructions and data.
- Program loader is used to enter/change the user program into the memory and to monitor the program execution.

PLC is a microcomputer tailored specifically for certain control tasks.

- Hardware: consists of the actual device technology.
- Firmware: is the software part, known as *executive software*, that is permanently installed and supplied by the the PLC manufacturer. Executive software determines
  - what functions are available to the user's program,
  - how the program is solved,
  - how the I/O is serviced,
  - what the PLC does during power up and down and fault conditions.
- Software: is the user program. User programs are usually stored in the RAM.

PLC Packaging

The manner in which a PLC & its I/O are packaged is critical in determining its suitability for an application.

- Heat Removal - appropriate means must be provided for generated heat removal to ensure low internal temperature. Commonly used methods include air venting, forced air circulation & heat sinking.
- Mounting - to be mounted inside NEMA rated enclosure.

Power Supply

- Provides voltage levels required for internal operations (typically +5 V dc or ± 12 V dc).
- Provides power for I/O modules.
- Provides constant voltages.
- Packaged properly to prevent overheat.
- Separate or built into the processing unit.
- It is one of the most critical components of a PLC -
  1. It is typically non-redundant. Hence a failure of the power supply can cause the control system to fail.
  2. It usually contains high-voltage components. Hence, an isolation failure can create the potential for serious injury and fire.

Memory

The memory function of the CPU stores programs and data that the CPU needs to perform various operations. The memory is organized into several sections according to the functions they perform.

- Executive Memory - collection of system programs stored in ROM.
- Scratch Pad - is the work area used to temporarily store the binary information used by the processor. These are volatile memory as RAM-type chips are usually used. Battery backed-up CMOS RAM are also used which may last up to 10 years.
- Processor File - the memory block in which programmer stores and manipulates the software. The processor file is made up of *program files*, and *data files*.

Data Files

Types of Data Files

	Data file	Description
I	Input Data	The current status of externally connected switches
O	Output Data	The status of those devices specified as outputs
B	Bit Data	The "scratch pad" to store individual bits
T	Timer Data	The data associated with timers
C	Counter Data	The data associated with counters
R	Control Data	The data associated with sequencers and other devices
N	Integer Data	Numbers, such as temperatures (in binary form)

e189

Central Processing Unit (CPU)

- CPU executes a program stored in the executive memory which is set by the manufacturer.
- It organizes all control activity by receiving inputs, performing logical decisions according to the program, and control the outputs.
- CPU does not operate on the I/O directly. Rather, it works with the I/O image stored in the I/O image memory. The I/O interface is responsible for transferring the image outputs to the I/O system, reading the inputs from the I/O system, and writing them into I/O image memory.
- A 'watchdog' timer is provided to time the CPU to execute the user's program. If this time exceeds a predetermined value, watchdog timer will indicate fault and execute subsequent predefined procedure.

Input/Output (I/O) Systems

- I/O system acts as the eyes, ears and hands of PLCs.
- Discrete I/O - signal is discrete, such as ON/OFF, OPEN/CLOSE, energized/de-energized etc.
- Data I/O - complex system needs data, requires ADC/DAC.
- Input Module functions:
  - Reliable signal detection
  - Voltage adjustment of control voltage to logic voltage
  - Protection of sensitive electronics from external voltages
  - Screening of signals.
- Output Modules functions:
  - Voltage adjustment of logic voltages to control voltage
  - Protection of sensitive electronics from spurious voltages from the controller
  - Power amplification for actuation of control elements
  - Short-circuit and overload protection of output modules

I/O Systems . . .

- Discrete I/O Inputs - push-buttons, selector switches, joy sticks, relay contacts, pressure switches, level switches, starter contacts, temperature switches, flow switches, limit switches, photo-electric switches, and proximity switches.
- Discrete I/O Outputs - light, relays, solenoids, starters, alarms, valves, heating elements, and motors.
- Data I/O Inputs - potentiometers, temperature transducers, level transducers, pressure transducers, humidity transducers, encoders, bar code readers, wind speed transducers.
- Data I/O Outputs - analog meters, digital meters, stepper motors (signals), variable voltage outputs, and variable current outputs.

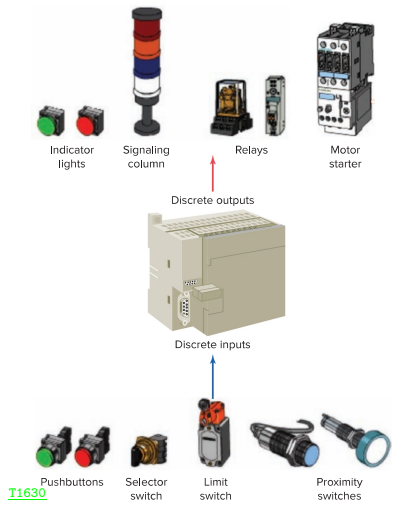

Discrete input and output devices.

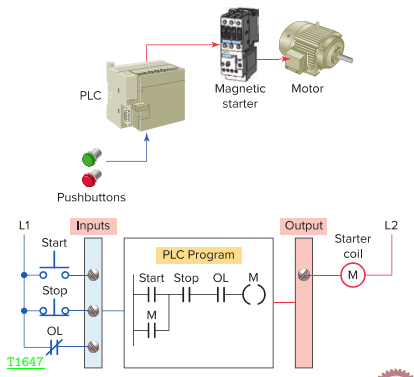

PLC control of a motor.

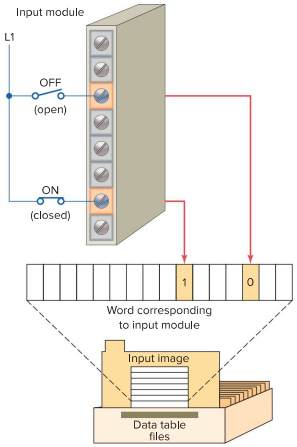

T1635

Connection of an open and closed switch to the input image table file through the input module

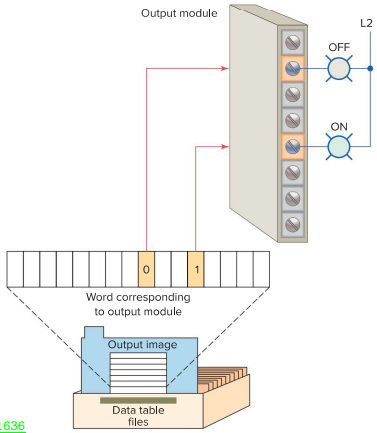

T1636

Connections of pilot lights to the output image table file through the output module

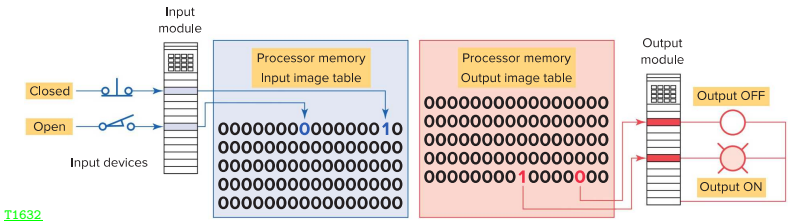

T1632

Input and output tables.

PLC Operation Review

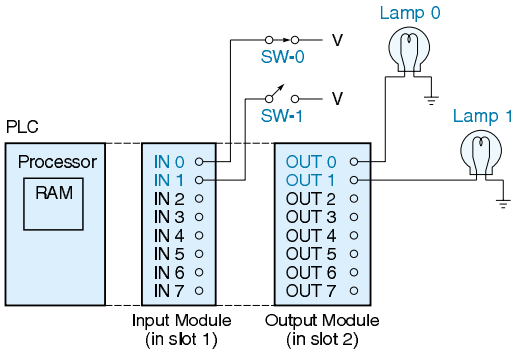

e194

2 switches (SW-0 & SW-1) are connected via terminal IN-0 and IN-1 of input module. 2 terminals of output module (OUT-0 & OUT-1) drive 2 indicator lamps (Lamp-0 & Lamp-1)

.

...

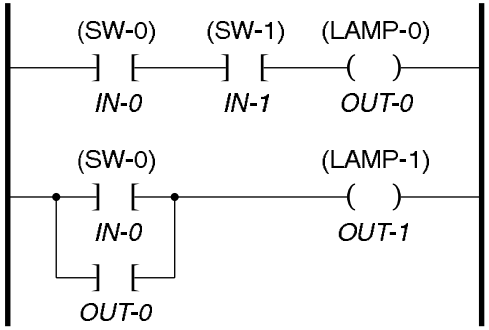

e195

The ladder diagram (LD) has two rungs. The top rung will light Lamp-0 & if both SW-0 and SW-1 are closed. The bottom rung will light Lamp-1 if either SW-0 or OUT-0 are closed.

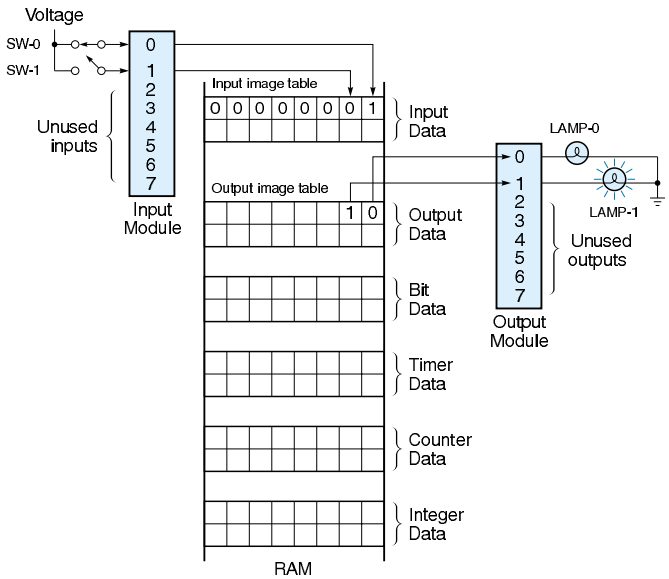

e196

...

If the self diagnostic check determine that the system is operating properly, PLC start scanning operation.

1. Update the Input Image Table
2. Scan Program Instructions
3. Update Output Terminals

Three-step scanning process is continuous and is repeated many times each second. The time it takes to complete one scan depends on the size of the program and the microprocessor clock speed.

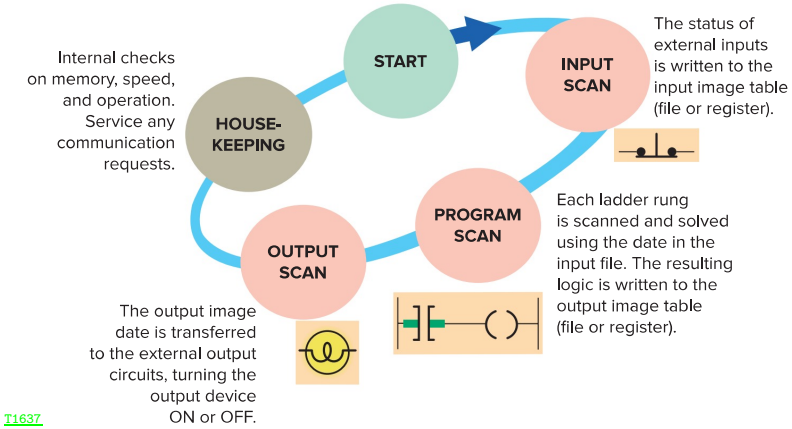

T1637

PLC program scan cycle.

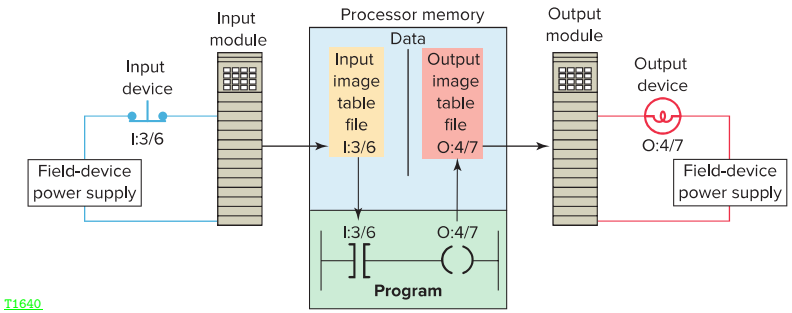

T1640

Scan process applied to a single rung program.

PLC Programming

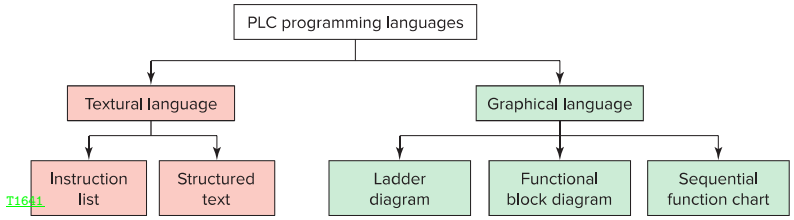

T1641

Standard IEC 61131 languages associated with PLC programming.

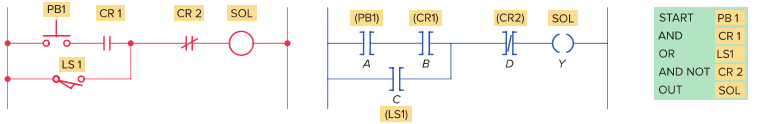

T1642

(a) Hardwired relay control circuit (b) Equivalent ladder diagram (LD) program (c) Equivalent instruction list (IL) program

Comparison of ladder diagram and instruction list programming.

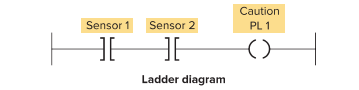

Ladder diagram

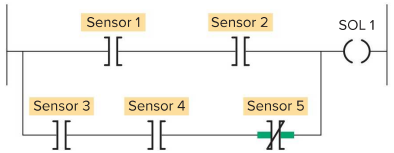

Ladder diagram (LD) program

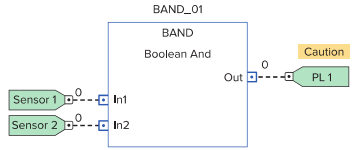

T1643 Function block diagram

```
IF Sensor_1 AND Sensor_2 THEN
        SOL_1 := 1;
ELSEIF Sensor_3 AND Sensor_4 AND NOT Sensor_5 THEN
        SOL_1 := 1;
END_IF;
```

T1644 Structured text (ST) program

PLC ladder and equivalent function block diagram.

PLC ladder and equivalent structured text program.

PLC Programming Languages

EN 61131-3 defines five PLC programming languages:

1. Ladder Diagram (LD): graphic language derived from circuit diagram of directly wired relay controls.
2. Function Block Diagram (FBD): functions & function blocks are represented graphically and interconnected into networks.
3. Instruction List (IL): textual assembler-type language consisting of an operator and an operand.
4. Structured Text (ST): high level language based on Pascal.
5. Sequential Function Chart (SFC): a language resource for the structuring of sequence-oriented control programs.

Programming Devices

Programming a PLC involves 3 categories:

1. Handheld Programmers - are small inexpensive devices. These typically have membrane keys for entering data and LCD displays to show one line of a ladder program.
2. Dedicated Terminals - are designed for one particular brand of PLC. These provides troubleshooting operation while the PLC is running.
3. Micro-Computers / PCs - are widely used to program and simulate the program. Tested programs are downloaded to the PLC using serial communications.

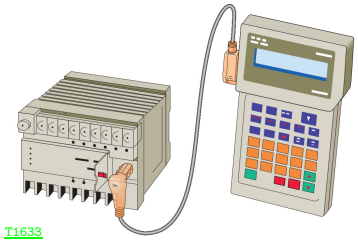

T1633

Hand-held programming terminal.

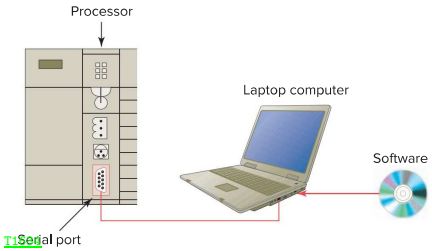

T1634

Computer used as the programming device.

Example: A Mixing Process

A mixer motor is to be used to stir the liquid in a vat when temperature and pressure reach pre-set values. Direct manual operation of the motor is provided by means of a separate push-button.

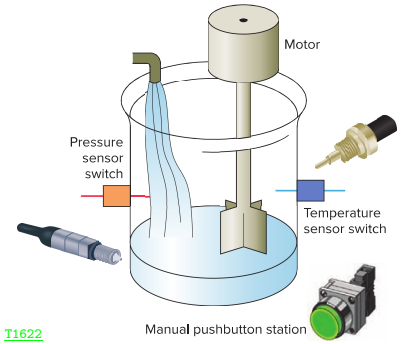

T1622

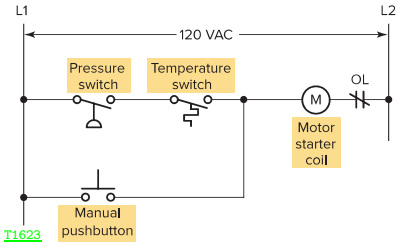

T1623

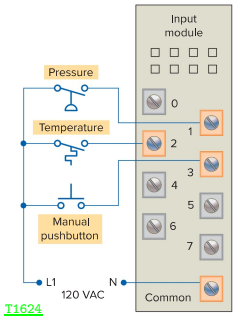

T1624

Configured input module

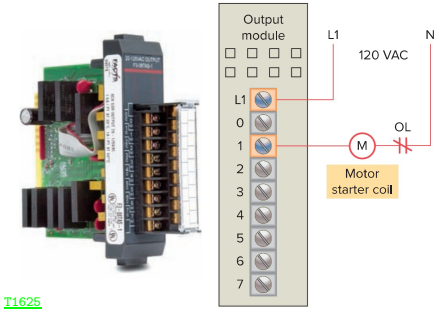

T1625

Configured output module

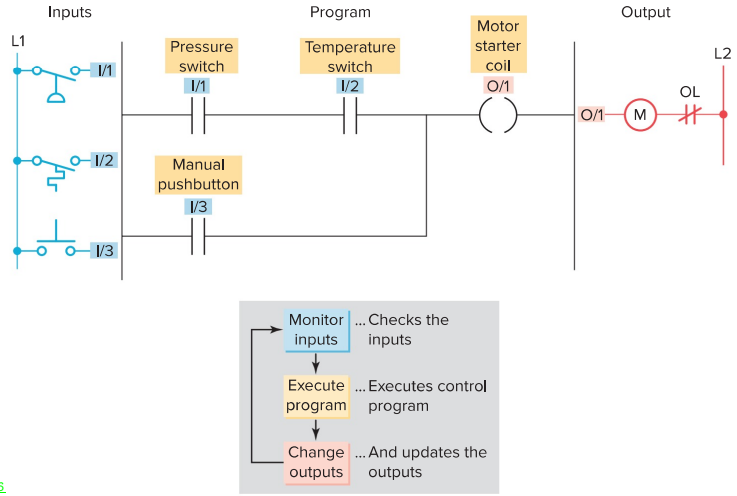

T1626

Process control PLC ladder logic program with typical addressing scheme

Ladder Diagram (LD)

- The use of ladder programming involves writing a program in a manner to drawing a switching circuit. The ladder diagram consists of two vertical lines representing the power rails, and circuits are connected as horizontal lines.
- Advantages of Ladder Language -
  - It is readily understood and maintained.
  - It provides graphic display of program flow.
  - Programming is fast.
  - Generates more readable programs for sequence control.

PLC Ladder Programming Conventions

1. The vertical lines of the diagram represent the power rails between which the circuits are constructed.
2. Each rung on the ladder defines one operation in the control process.
3. A LD is read from left to right and from top to bottom.
4. Each rung must start with an input or inputs and must end with at least one output.
5. Electrical devices are shown in their normal conditions, e.g. a normally closed switch is shown closed.
6. A device can appear in more than one rung of a ladder.
7. The inputs and outputs are all identified by their addresses, the notation used depending on the PLC manufacturers.

Elements of Ladder Diagram

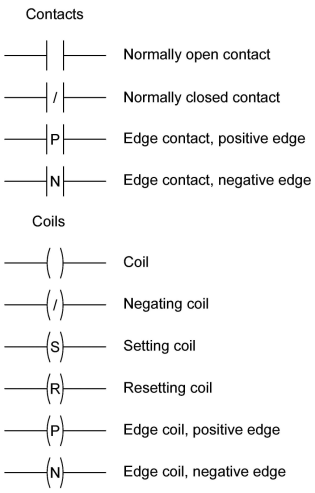

e110

Latch Circuit

- After being energized, latch circuit maintains that state.
- If power fails, latch rung will be de-energized. When power is restored, machine will not automatically restarted, it can be manually restarted by pressing START switch.

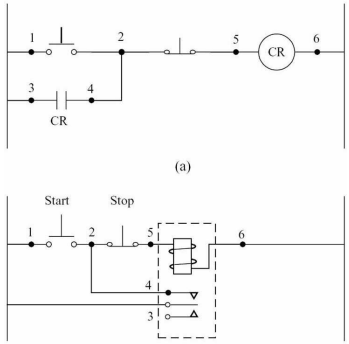

e377

Timers/Counters

- Timers/counters instructions results in internal outputs that provides the same functions as hardware timers/counters.
- These are used to activate or deactivate a device after an expired intervals/counts.
- Both of these require an accumulator resistor to store the elapsed count/time and a register to store the preset value.
- Timers can be linked together, the term is *cascade*, to give larger delay times than is possible with just one timer.

Timers

- Timers are output instructions that are internal to the PLC. These are capable of providing timed control of devices that they activate or deactivate.
- EN 61131-3 defines 3 types of timer function blocks:
  1. TP: Pulse Timing
  2. TON: On-delay timing
  3. TOF: Off-delay timing
- The length of the time delay is determined by specifying a Preset value. Timer is enabled when the rung conditions become TRUE. Once enabled, it automatically counts up until it reaches the preset value and then goes TRUE.

Timer Instruction Parameters

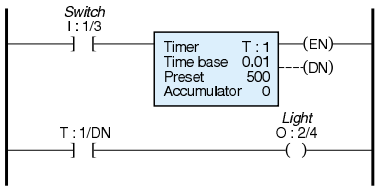

e186

- T : 1 - timer address, where 1st address hods the status bits EN, TT, & DN; 2nd address holds preset value and the 3rd address holds accumulator to hold the current value.
- EN - bit is TRUE as long as the timer rung is TRUE.
- TT - bit is TRUE as long as the timer is counting
- DN - bit is TRUE when the timer is done.

Timer Example

A batch process– which involves filling a container with a liquid, mixing the liquid, and draining the container – is automated with a PLC. The sequence of events is as follows:

1. *a fill valve opens and lets the liquid into the container until it is full.*
2. *liquid in the container is mixed for 3 minutes.*
3. *a drain valve opens and drains the tank.*

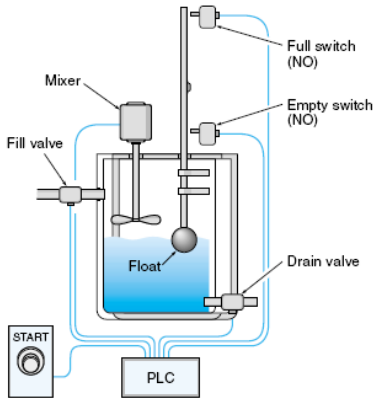

e197 (a) Hardware

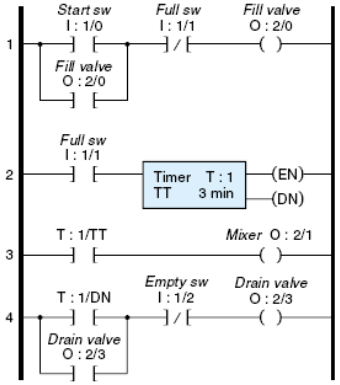

(b) Ladder diagram

Counters

- Counters are used to detect and count piece members and events. Counter instruction is placed in a rung and will increment (or decrement) every time the rung makes a FALSE-to-TRUE transition. The count is retained until a RESET instruction is enabled. The counter has a preset value associated with it. When the count gets up to the preset value, the output goes TRUE.
- EN 61131-3 differentiates 3 different counter modules:
  1. CTU: Incremental counter
  2. CTD: Decremental counter
  3. CTUD: Incremental/Decremental counter

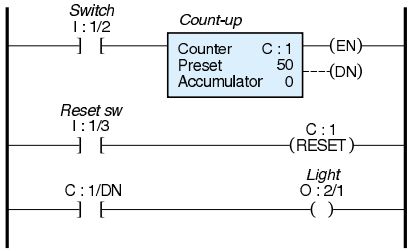

e187

- C : 1 - counter address where 1st address hods the status bits EN, & DN; 2nd address holds preset value and the 3rd address holds accumulator to hold the current value.
- EN - bit is TRUE as long as the counter rung is TRUE.
- DN - bit is TRUE when the counting is done.
- RESET - when this bit goes TRUE, it resets the counter.

Sequencers

The sequencer instruction is used when a repeating sequence of output is required. Example: a process for washing parts requires the following sequences:

1. Wash Cycle: spray water and detergent for 2 mins
2. Rinse Cycle: rinse with water cycle for only 1 min.
3. Drying Cycle: water off, air blow dry for 3 mins.

The program consists of 5 timer rungs and a sequencer rung. The times are activated down the program, and their outputs are used to step the sequencer instructions. The sequencer instruction presents 3 output bit patters to module 2.

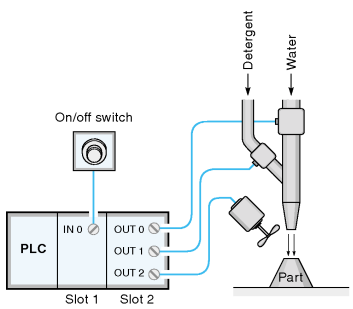

(a) Hardware

	(Blow-dry fan) 7	6	5	4	3	(Detergent valve) 2	(Water valve) 1	0
B : 1						0	1	1
B : 2						0	0	1
B : 3						1	0	0

(b) Sequencer File

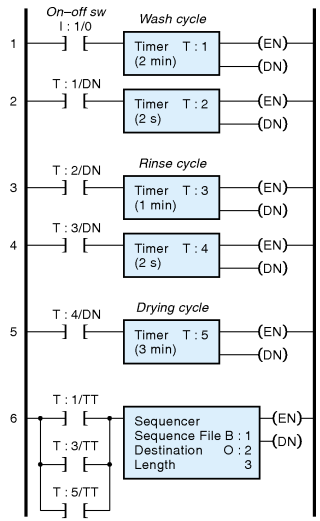

(c) Ladder diagram

e400

Example: 2-point Controller

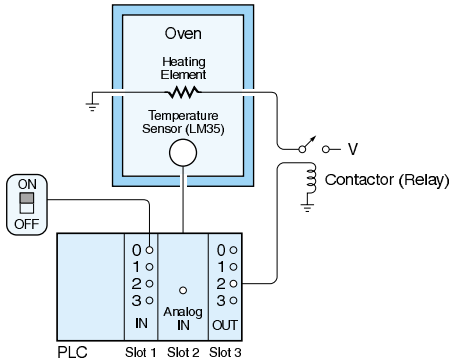

e192

The temperature in an electric oven is to be maintained at approximately 100° C, using two-point controller.

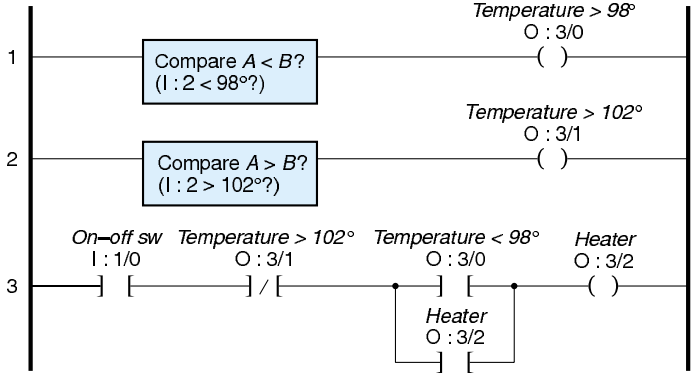

e193

PID Instruction

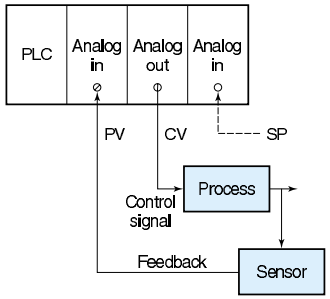

(a) Hardware

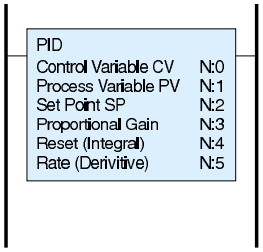

(b) PID Instruction in ladder diagram

e191