ME 6401: Micro-processor & micro-controller

Dr. Md. Zahurul Haq, *Ph.D., CEA, FBSME, FIEB*

Professor
Department of Mechanical Engineering
Bangladesh University of Engineering & Technology (BUET)
Dhaka-1000, Bangladesh

http://zahurul.buet.ac.bd/

ME 6401: Advanced Mechatronics
`http://zahurul.buet.ac.bd/ME6401/`

Advantages of Microprocessor Based Control

- Low-level signal from sensors, once converted to digital, can be transmitted long distances virtually error-free.
- A microprocessor can handle complex calculations and control strategies.
- Changing the control strategy is easy by loading in a new program; no hardware changes are required.
- Microprocessor based controllers can be easily connected to computer networks within an organization. This allows the designers to enter program changes and read current status from their desk terminals.
- long-term memory is available to keep track of parameters in slow-moving systems.

Simplified Computer/Microcomputer

Computers have 3 basic sections:

1. CPU - to recognize and carry out program instructions. The instructions are known as *opcode* or *machine code*.It is truly the brain of the computer.
2. I/O Interfaces - to handle communications between computer and the outside world.
3. Memory - to hold the program instruction and data.

I/O ⟺ CPU ⟺ Memory

- Digital signals move from one section to another along the buses.
- A single IC CPU is known as microprocessor (MPU).

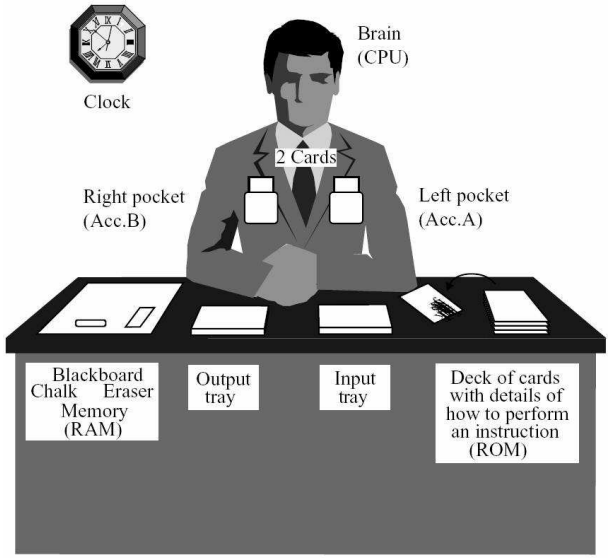

e200

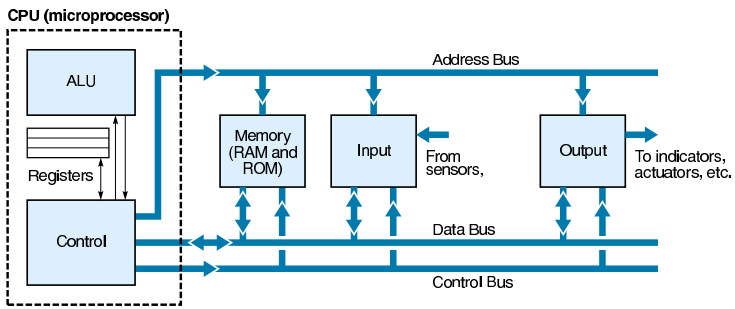

e166

Types of processes performed by (CPU):

- read/write data from/to memory or from/to an I/O device
- read instruction from memory
- perform internal manipulation of data within the processor.

The internal storage of the processor is known as its registers.

Central Processing Unit (CPU)

- CPU contains logic to step through a program.
- Programs are composed of many very simple individual operations, called instructions, that specify in exact detail how the CPU will carry out an algorithm/program.
- Each unique instruction is represented as a binary value called an opcode. CPU advances through opcodes on each clock cycle.
- When an opcode is fetched from memory, it is decoded, after which appropriate actions are carried out.
- Program Counter (PC) register maintains the address of the next instruction to be fetched from program memory.
- After executing each instruction, PC is incremented, and a new instruction is fetched from the address indicated by PC. When branch instructions are encountered Stack Pointer (SP) register is used.

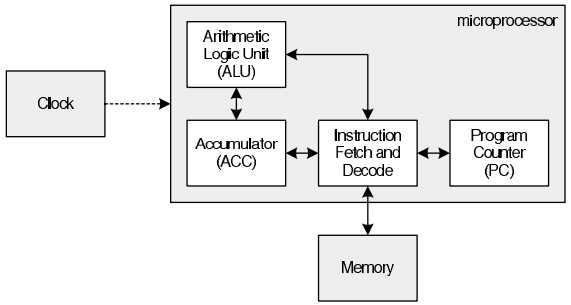

e199

Arithmetic logic unit (ALU) is responsible for performing arithmetic and logical operations. It also keeps track of status flags that tell subsequent instructions whether the result was positive, negative, or zero, and whether an addition or subtraction operation created a carry or borrow.

Memory

Microprocessors require memory resources to store programs and data. Memory can be classified two broad categories: Volatile - loses its contents when power is turned off & Non-volatile - can retain its contents even if power is turned off.

1. Read Only Memory (ROM)
   - Programmable Read Only Memory (PROM)
   - Erasable Programmable ROM (EPROM)
   - Electrically Erasable Programmable ROM (EEPROM)
2. Random Access Memory (RAM)
   - Dynamic Random Access Memory (DRAM)
   - Static Random Access Memory (SRAM)
3. Other Forms of Memory
   - Cache Memory
   - Flash Memory
   - Video Memory (VRAM)

Read Only Memory

The ROM, also known as firmware, cannot be written on or erased using the computer. ROM chips contain programs that are set in at the factory; these are special instructions for computer operations. ROM chips do not loose their contents when power is removed.

- PROM - can be programmed using special equipment. Once the program is written, it cannot be erased.
- EPROM - are like ROM chips except that the contents can be erased, and the new data can be written. Erasure is done with a special device that uses UV light.
- EEPROM - can be reprogrammed using special electrical impulses. The advantages of EEPROM chips is that they need not to be removed from the computer to be changed.

Random Access Memory

The RAM, also known as *internal memory*, *primary storage* or simply *memory*. It has three basic tasks:

1. It holds the data for processing.
2. It holds the instructions (programs).
3. It holds the data after it is processed & waiting to be sent to an output or storage.

- The contents of the RAM address locations change continually as computer executes a program. It requires fast READ and WRITE cycle times so as no to slow down the computer operation.
- A major disadvantage of RAMs is that they are volatile and loose all the stored information if power is interrupted.

Other Memories

- Cache Memory - These are usually built into the MPU chip. These allows the CPU to run faster because it does not have to take time to swap instructions in and out of the RAM. The most frequently used instructions are kept in the cache memory so the CPU can look there fast.
- Flash Memory - Consists of circuitry on credit-card-size cards that can be inserted into slots connecting to the PC motherboard. These are non-volatile memory. These are becoming very popular in microprocessor/micro-controller based applications.
- Video Memory - chips used to store display images for the monitor. The amount of video memory determines how fast images appear and how many colors are available.

Input/Output Units

- The I/O operation is defined as the transfer of data between the MPU and the external world. The term peripheral devices is used for the pieces of equipment that exchange data with a MPU system.
- In input operations the input device places the data in the data register of the interface chip to hold until it is read by the MPU. In output operations, the MPU places the data in the register until it is read by the peripheral.
- As the speeds and characteristics of peripheral devices can differ significantly from those of the MPUs, these are connected via interface chips to synchronize data transfers between MPU and the peripheral devices.

Buses

There are three buses external to the MPU and two buses within MPU. The external address and data buses are the extension of the same buses inside the MPU.

1. Address Bus - is a 16-line unidirectional bus that carries 16-bit address code from the MPU to the memory unit to select the memory location which the MPU is accessing for a READ or WRITE operation.
2. Data Bus - is a 8-line bidirectional bus over which 8-bit words can be sent from the MPU to the memory or from the memory to the MPU. It can carry data/instruction codes.
3. Control Bus - is grouping of all the timing and control signals needed to synchronize the operation of MPU with the other units of the microcomputer.

Computer Words

- The fundamental unit of information in a computer is word. Although it is made up of several bits, computer treats each word as a single unit and stores each word in a specific memory location.
- The word size for the majority of MPUs is 8-bits (1 byte), but 16-bit and 32-bit MPUs are becoming increasingly common.
- Words stored in a computer's memory unit can represent several types of information:
  - Binary Numerical Data - simply represent a numerical quantity in the binary number system.

$$01110011_2 \Longleftrightarrow 115_{10}$$

- Coded Data - Binary-coded-decimal (BCD) code is widely used in computers where each group of 4 bits can be represented by a single decimal digit. Thus, an 8-bit word can represent two decimal digits, a 16-bit word can represent four decimal digits.
- Data words can be alpha-numerics. Alphabetic characters and other special characters or symbols using codes such as the 7-bit ASCII code, one extra parity bit is added to each code word to produce one-byte ASCII code.
- Instruction Codes - for most computers, the instruction words that make up a program will convey *two* types of information:
  - the *operation* to be performed, and
  - the *address* of the operand.

Instruction Codes

A hypothetical 20-bit instruction word

4-Bit	16-Bit
op code	operand address

- With 4-bits used for operation code (or op code), there are $2^4 = 16$ different possible op codes, with each indicating a different instruction. A more versatile computer would have a greater number of instructions.
- With 16-bits used for address code, there are $2^{16} = 65,536$ different possible addresses.
- Complete instruction words are expressed in hexadecimal.

`An example:` If op code 0100 represents one of the 16 possible operations, let it is assigned for addition (ADD). If the address code is 0101101001110010, then

$$\underbrace{4}_{op\ code}\quad \underbrace{5\ A\ 7\ 2}_{address\ code}$$

The instruction tells the computer to do the following:
Fetch the data word stored in the address location 5A72, send it to ALU, and add it to the number in the accumulator register. The sum will be then stored in the accumulator and the previous contents of the accumulator will be lost.

Micro-Controllers

- Micro-controller is the integration of a micro-processor with memory and I/O devices, and other peripherals such as timers, on a single chip.
- The general micro-controller has pins for external connections on inputs and outputs; power, clock and control signals. The pins for the inputs and outputs are grouped into I/O ports. Usually such ports have eight lines in order to be able to transfer an 8-bit word of data.
- Motorola 68HC11, Intel 8051 and PIC16Fxxx and PIC18Fxxx are examples of 8-bit micro-controllers.

Advantages of Micro-Controllers

- Fewer chips are required since most functions are already present on the processor chip.
- Lower cost and smaller size result from a simpler design.
- Lower power requirements.
- Few external connections are required because most are made on-chip, and the most of the chip connections can be used for I/O.
- Overall reliability are higher since there are fewer components and interconnections.

Micro-Processors vs. Micro-Controllers

- Microprocessors are most flexible, microprocessors are most compact.
- Microprocessor based systems usually have a von Neuman architecture with a single memory for both programs and data to allow maximum flexibility in allocation of memory.
- Micro-controller chips frequency embody the Harvard architecture which has separate memories for programs and data. It has the potential advantage of the separate interface allowing twice the memory transfer rate by instruction fetches to occur in parallel with data transfer.

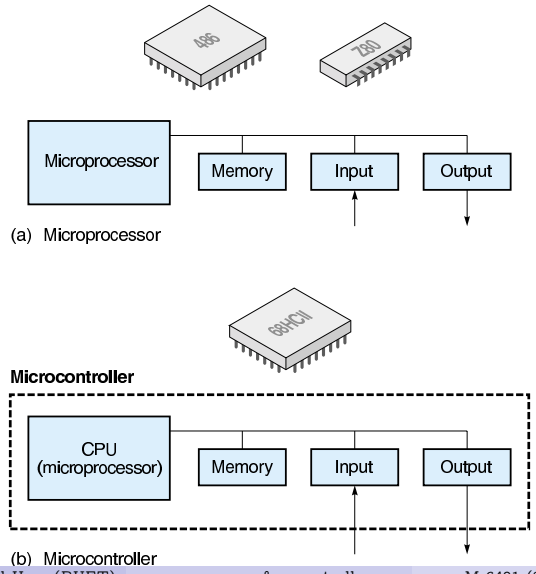

e165

An Elementary von Neuman Computer

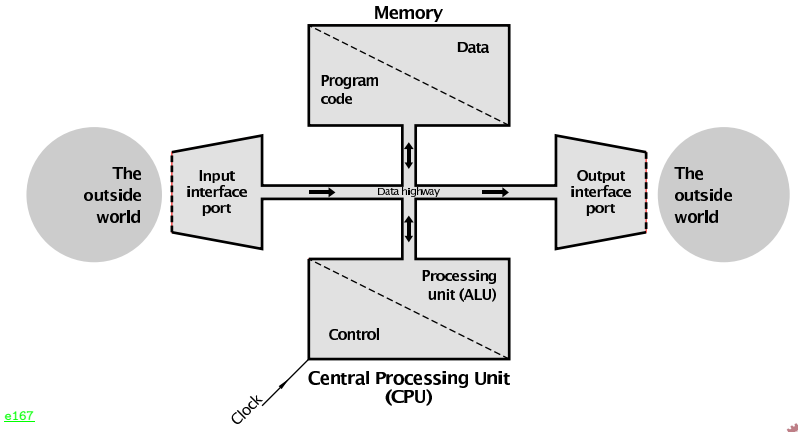

e167

An Elementary Harvard Architecture Computer

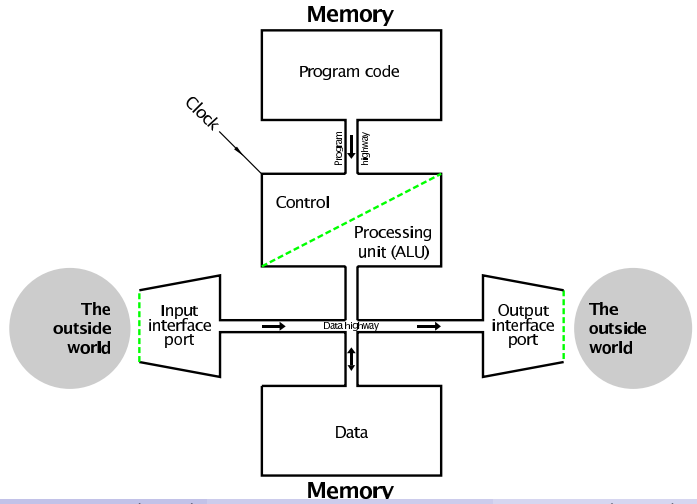

e168

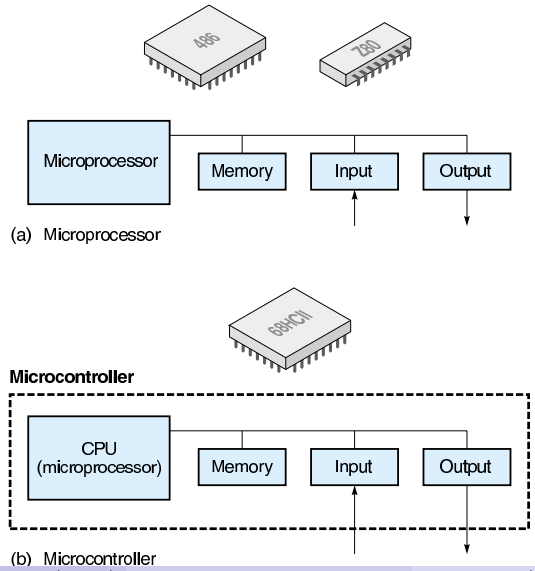

e165

Microcontroller Hardware

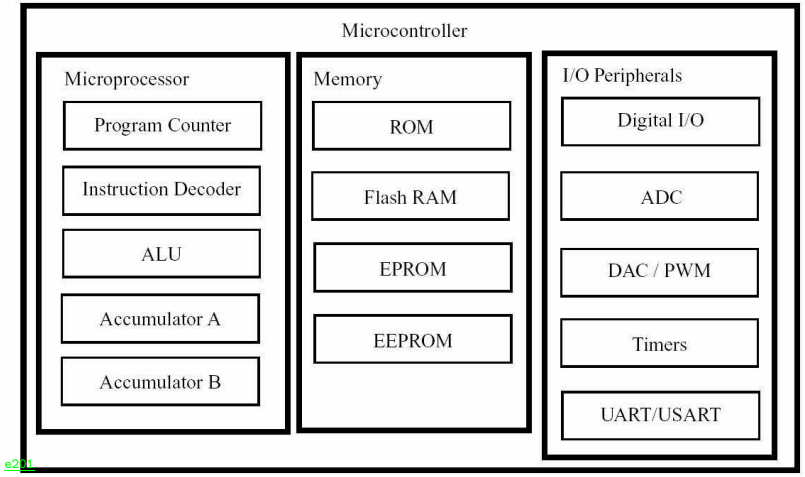

e201

PIC16F84: A Popular RISC Microcontroller

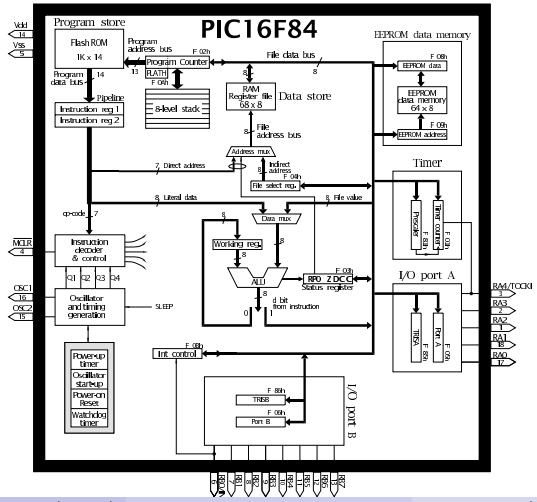

e170

Micro-Controller Applications

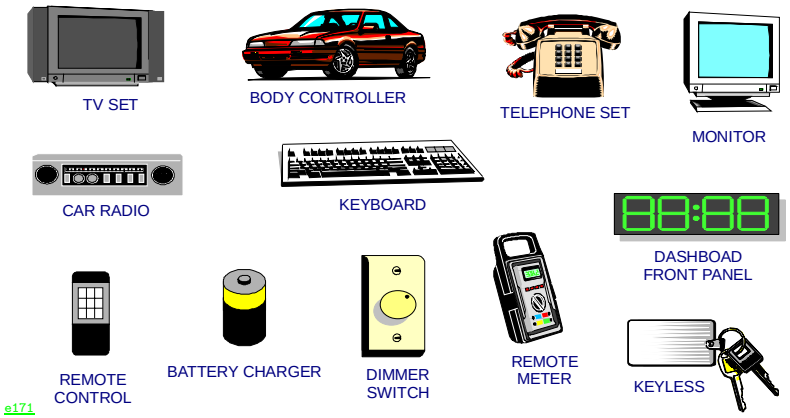

e171

Examples of Microcontroller Based System

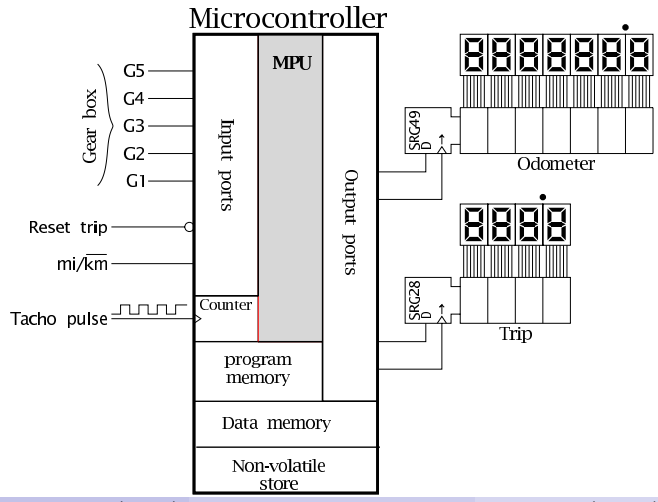

e169